QV 9, QV 10 - Anonymous, Dyn. XVIII

Plans, sections

NOTES	
1	Top of pit.
2	Shape of chamber is approximate: sketch shows rubble sloping down towards back of chamber and the ceiling relatively flat, but survey notes show both rubble and ceiling sloping upwards.
3	Uncertain if jamb exists.
4	Shape of lintel is uncertain.

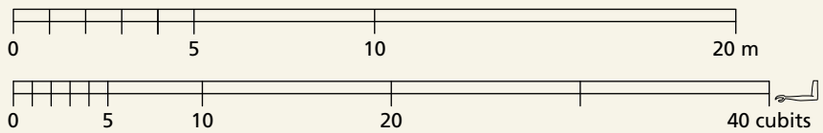

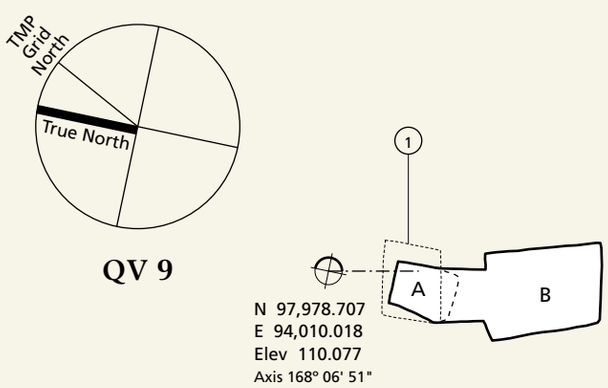

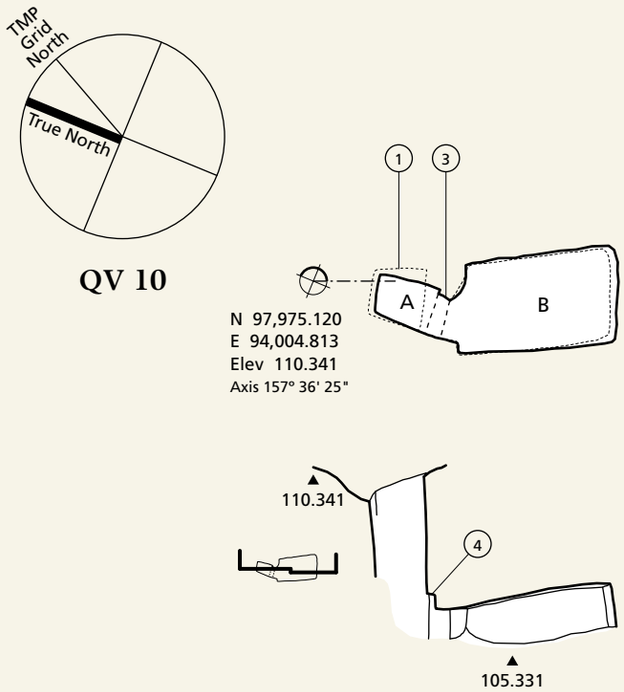

Courtesy of the Getty Conservation Institute and the Ministry of Tourism and Antiquities.

Drawn 2021 by Walton Chan.