QV 31 - Anonymous Princess-Queen, Dyn. XIX

Plan, sections, axonometric

NOTES	
1	Ceiling collapsed; anciently covered with plaster.
2	Roughly-cut opening.
3	Doorway badly damaged.
4	Pit measurements approximate.
5	Line of rubble at rear wall of chamber B.

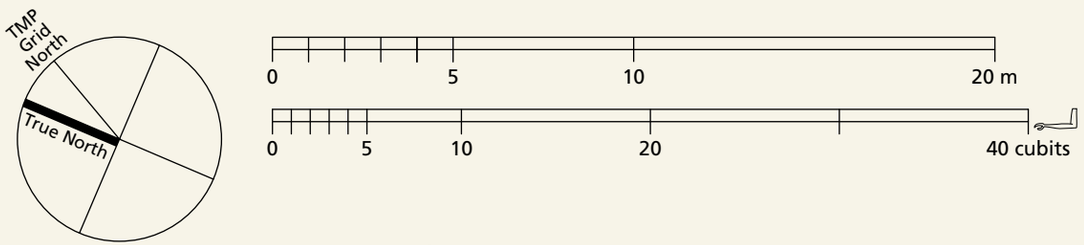

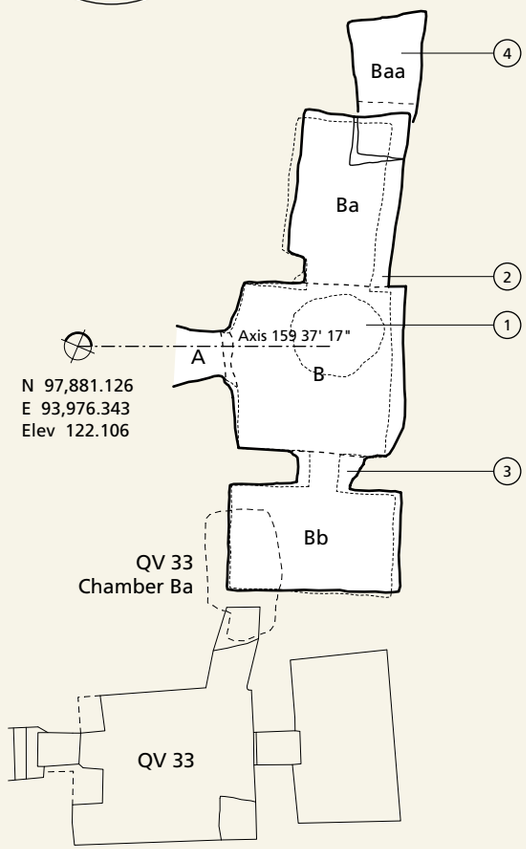

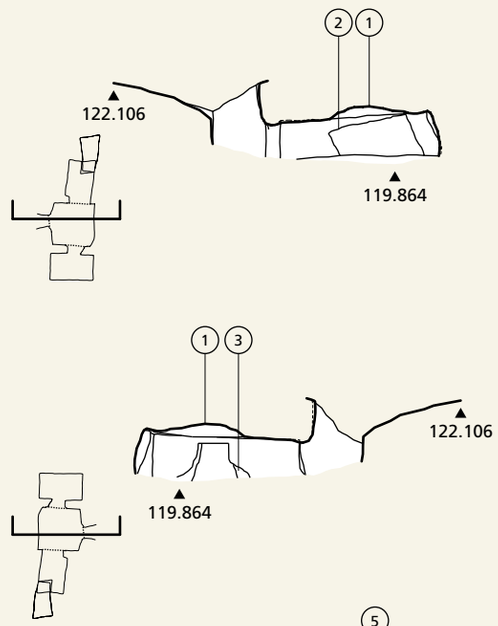

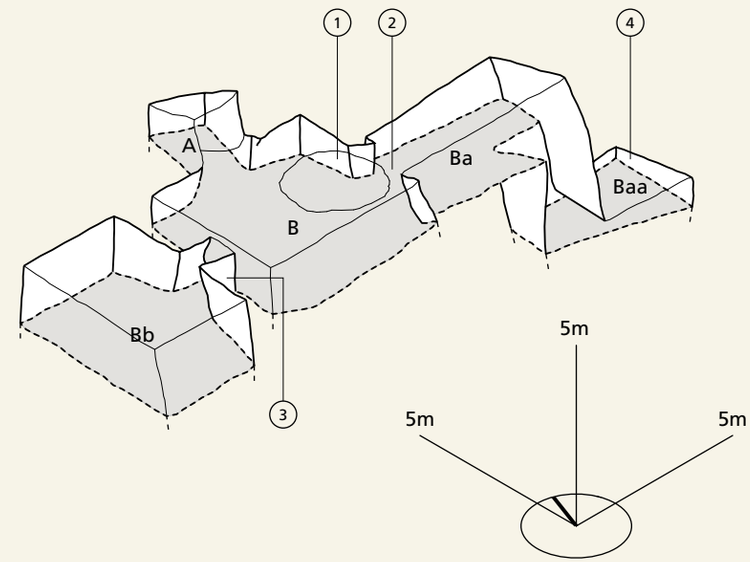

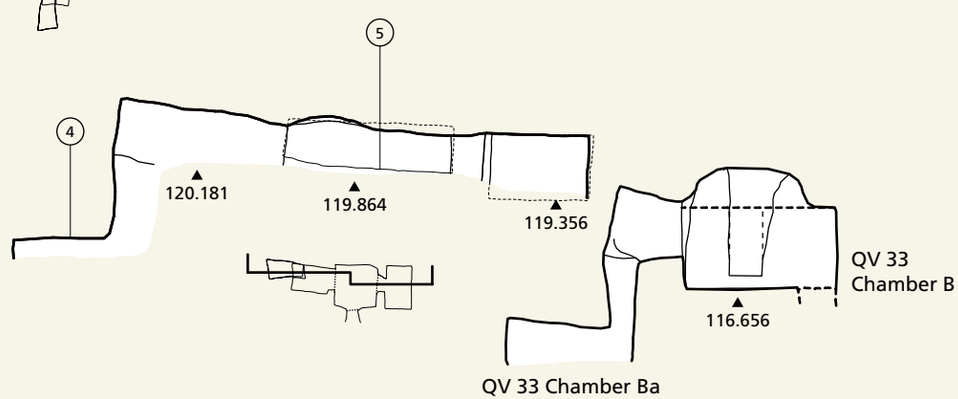

Courtesy of the Getty Conservation Institute and the Ministry of Tourism and Antiquities.

Drawn 2021 by Walton Chan.