QV 49, 50 - Anonymous, Dyn. XIX/XX

Plans, sections

NOTES	
1	Dimensions of stairway approximate.
2	Tomb unfinished or filled with debris; possibly breaks into QV 50.
3	Chamber B unfinished, cut to different levels along stratum lines.
4	End of chamber B possibly breaks into QV 49.

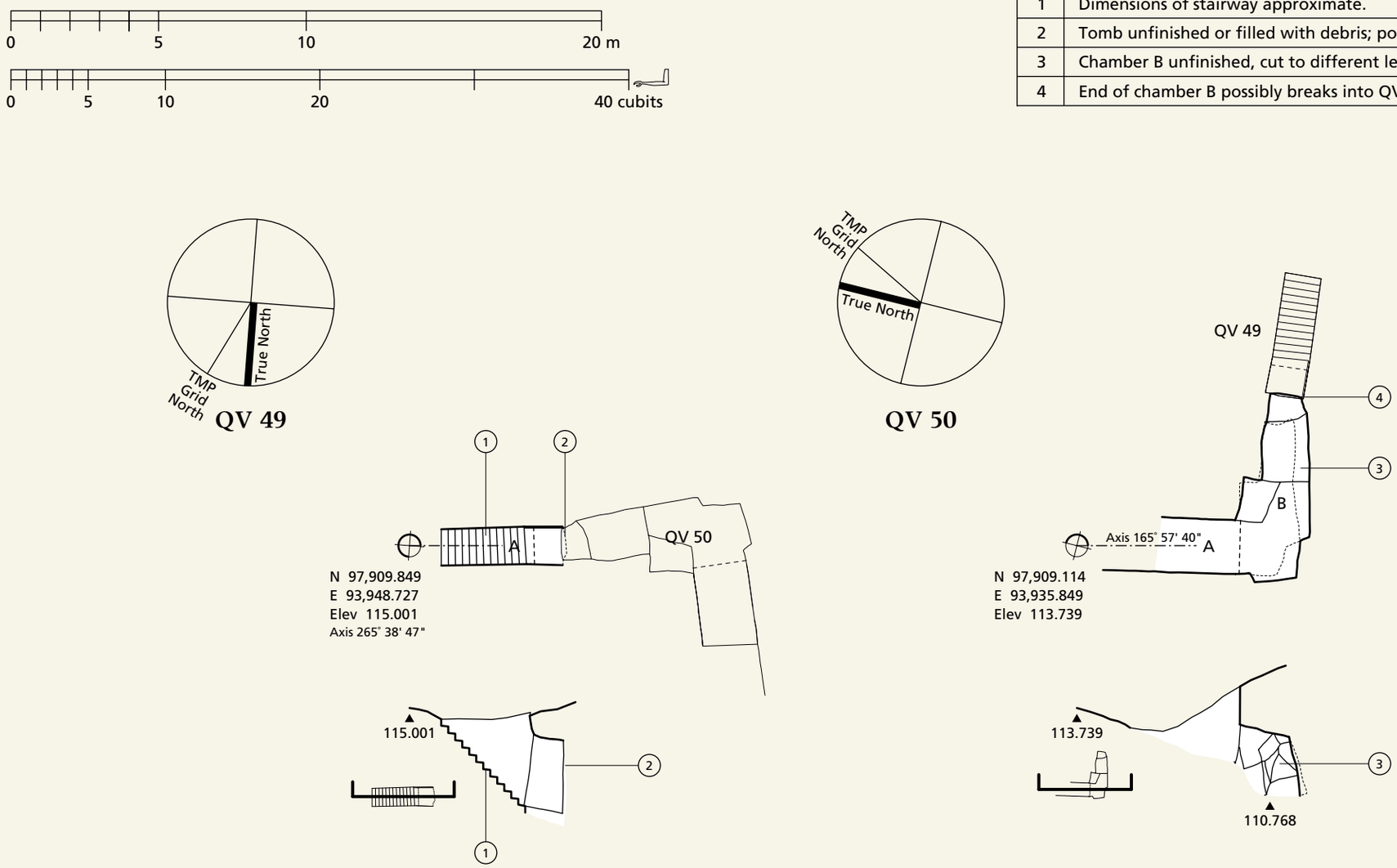

Courtesy of the Getty Conservation Institute and the Ministry of Tourism and Antiquities.

Drawn 2021 by Walton Chan.