QV 71 - Bentanat, Dyn. XIX

Plan, sections, axonometrics

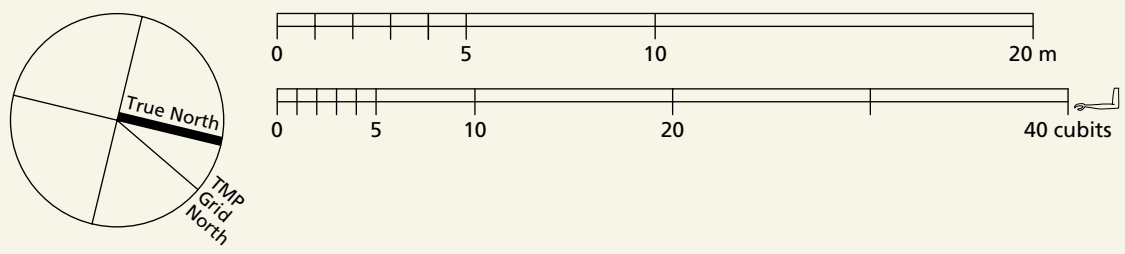

NOTES	
1	Central part of ceiling collapsed during construction and was then plastered and painted. Ceiling over front of chamber damaged.
2	Pillars built after original excavation of chamber, only lower 0.7m remain. Unpainted area in ceiling indicates top of east pillar.
3	Opening at floor of and side wall of chamber B leading to Ba.
4	Unfinished cutting at floor.
5	Floor of chamber Bb collapsed, opening into Ba below.
6	Post hole in ceiling at both jambs.
7	Irregularly-cut shelf.
8	Irregularly-cut pit in floor; filled with rubble.

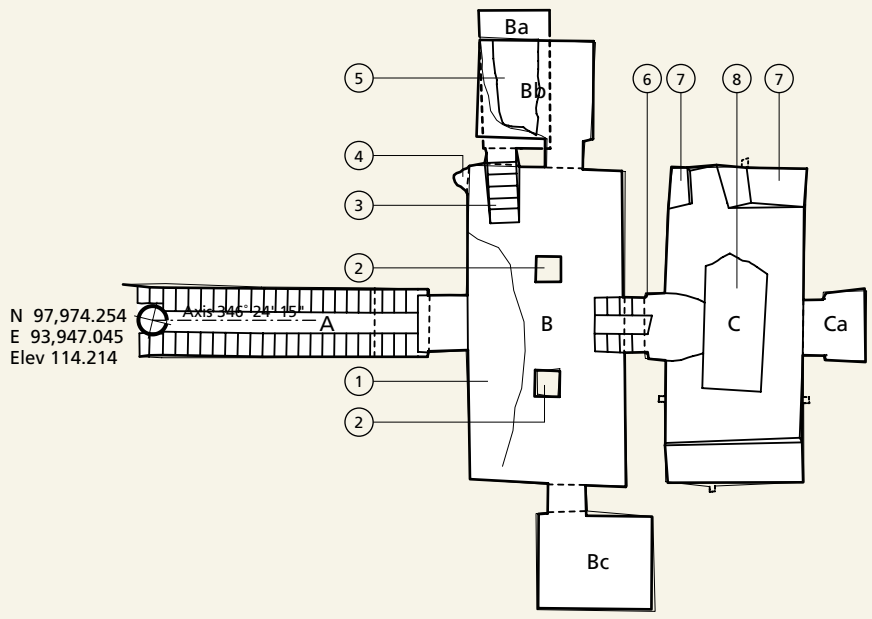

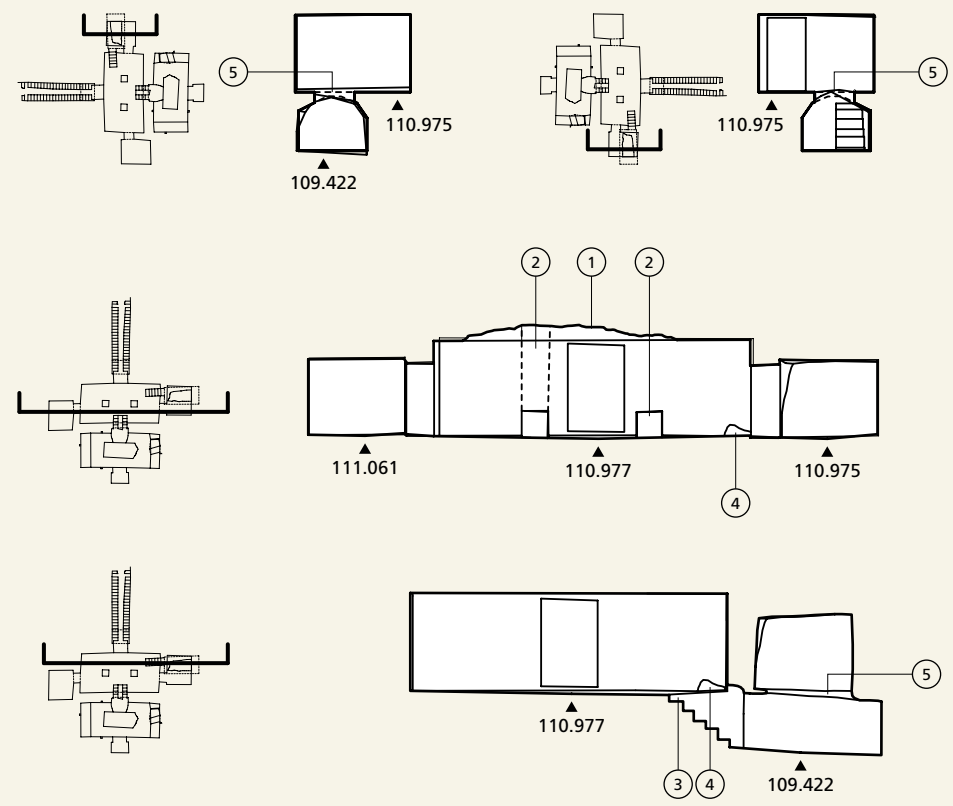

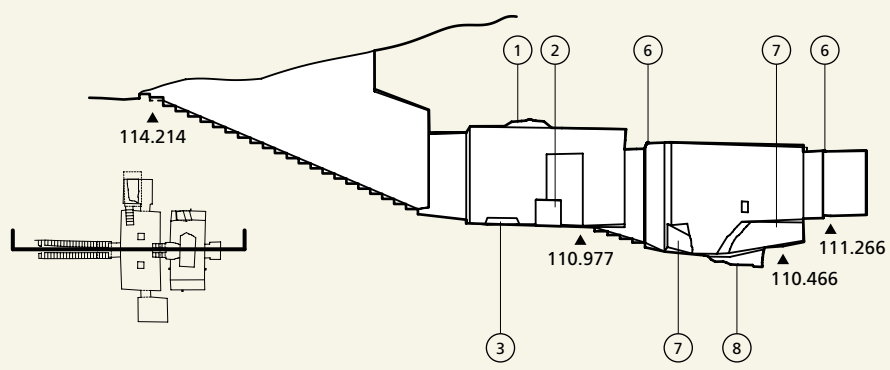

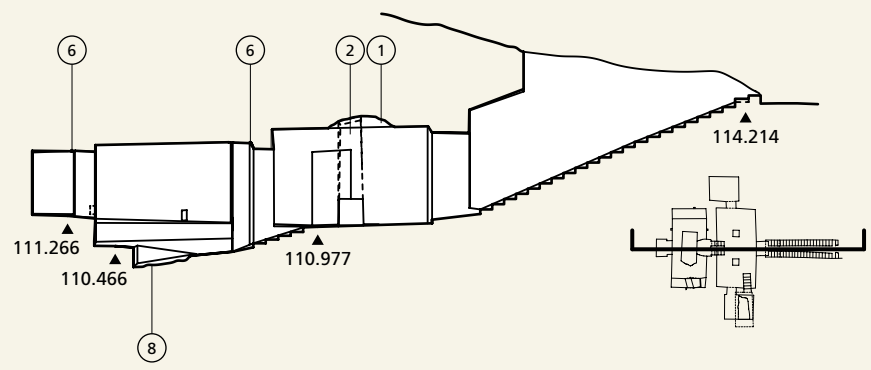

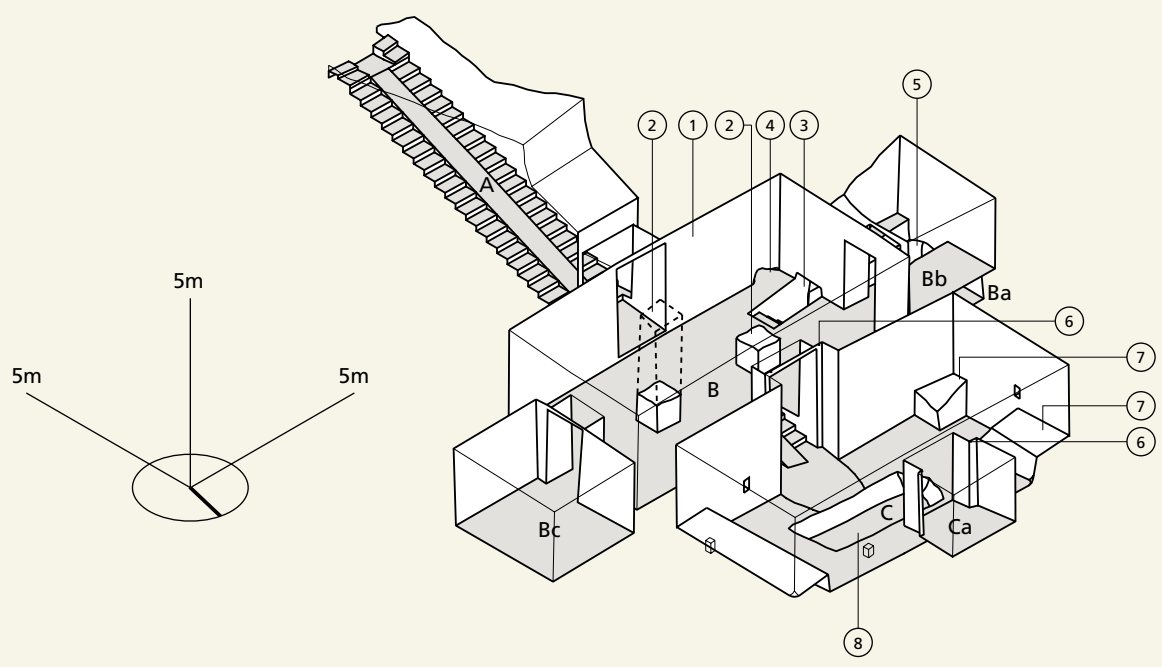

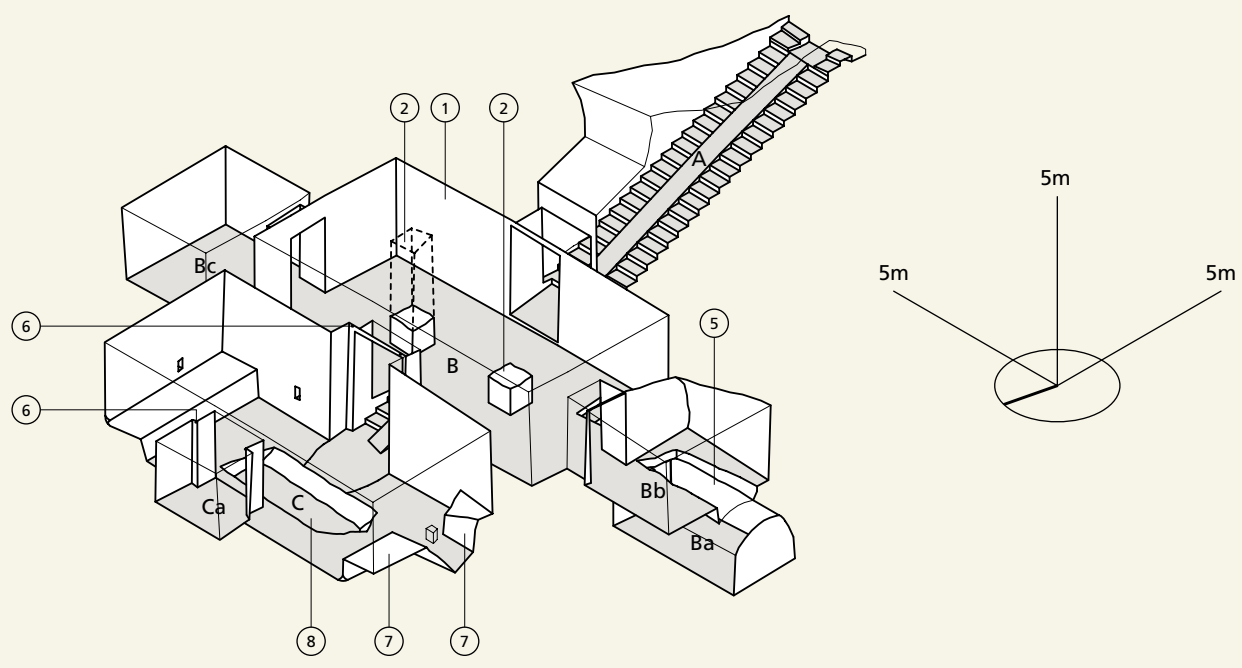

Courtesy of the Getty Conservation Institute and the Ministry of Tourism and Antiquities.

Drawn 2021 by Walton Chan.