Wadi A-2 - Anonymous ("Baraize's Tomb"), Dyn. XVIII

Plan, sections, axonometric

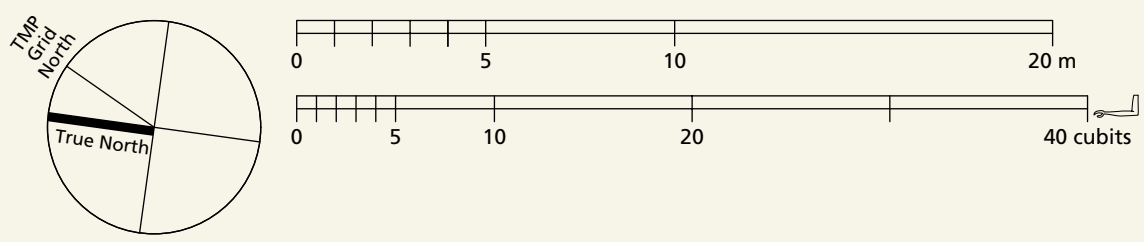

NOTES	
1	Cliff edge.
2	Platform inside crevice.
3	Cut blocks in rock, possibly steps.
4	Broken steps.
5	Approximate shape of broken ceiling.
6	Blocking stones on floor.
7	Shallow recess cut in floor, covered with rubble at time of TMP survey.
8	Approximate shape of original opening.
9	Approximate line of original ceiling.

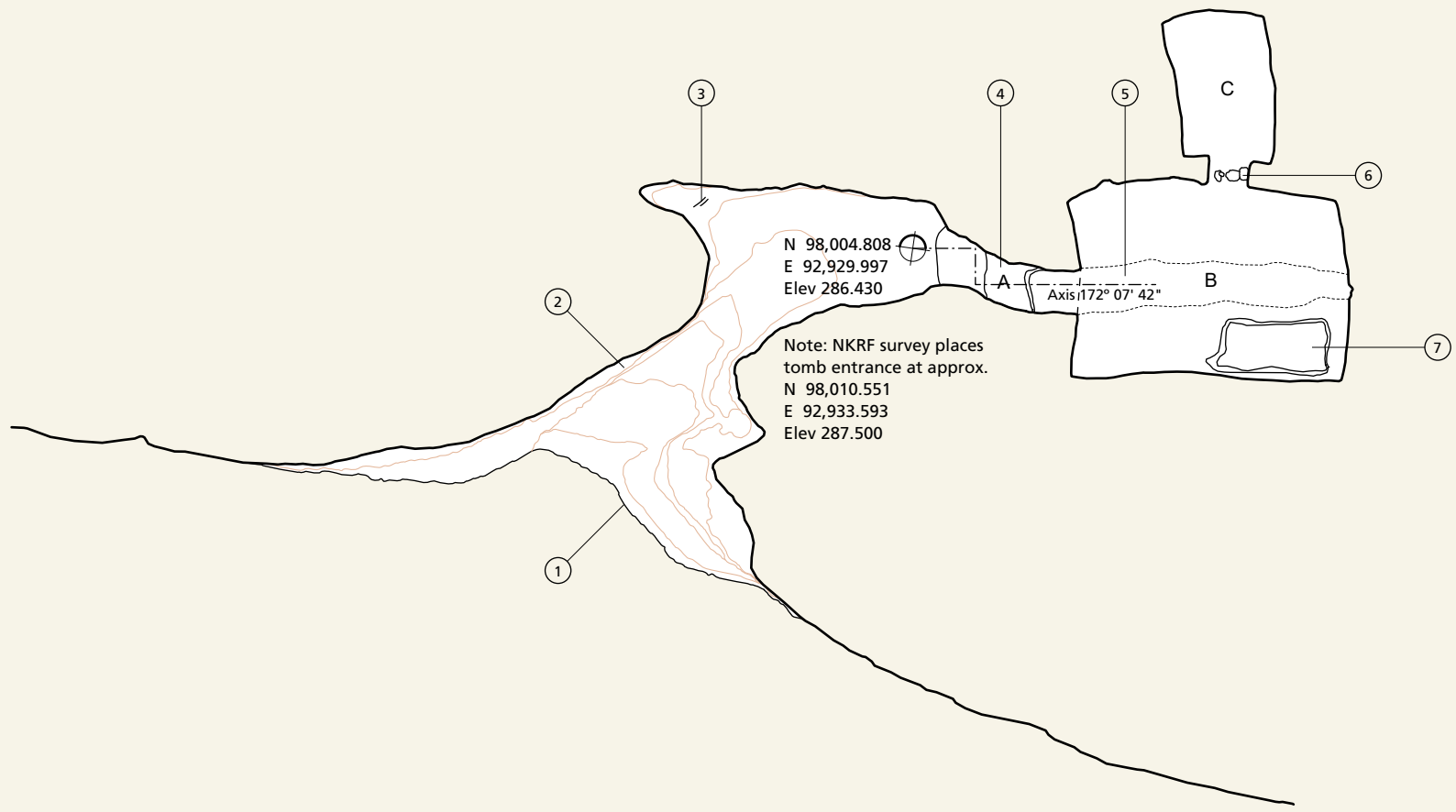

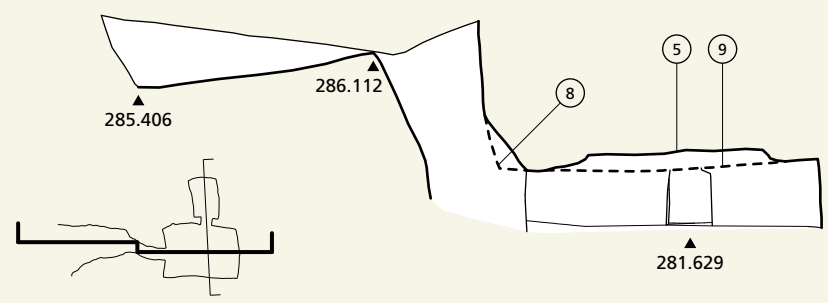

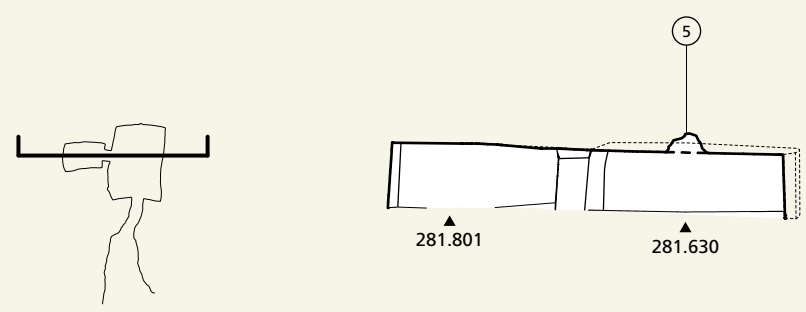

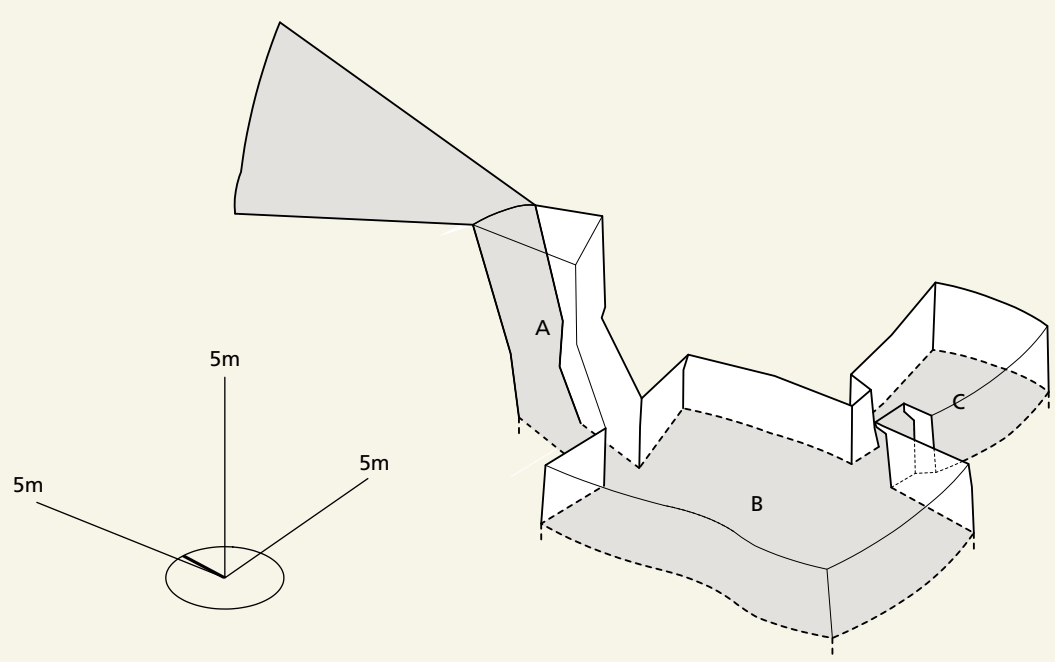

Plan courtesy New Kingdom Research Foundation, surveyed by Mohamed Abd el-Basset and Ahmed Hassan. Floor covered with rubble at time of TMP survey.